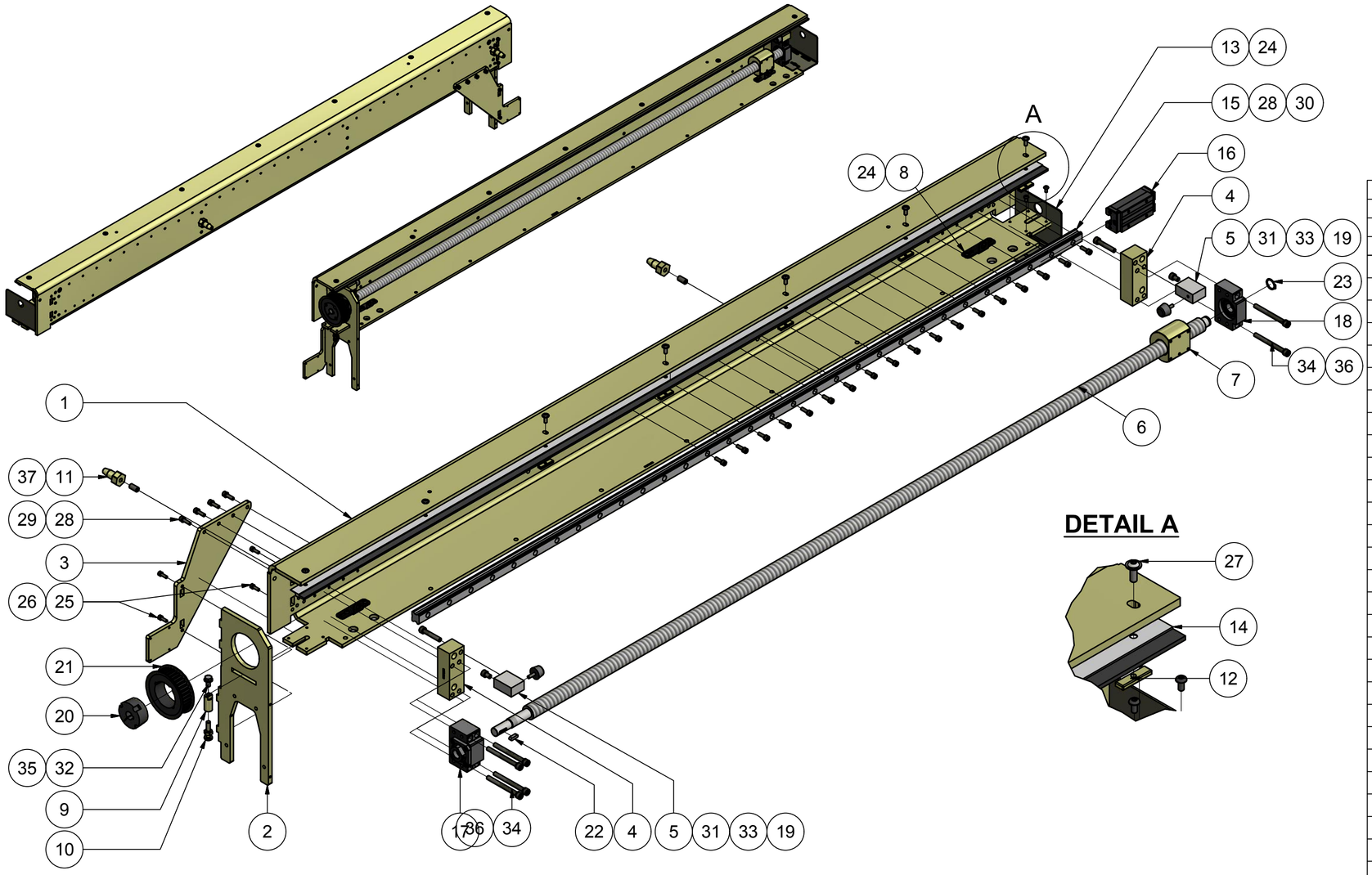

DETAIL A

ASSEMBLY ORDER:
MOUNT TAPER BUSH & BELT PULLEY AFTER MOUNTING ITEM 2

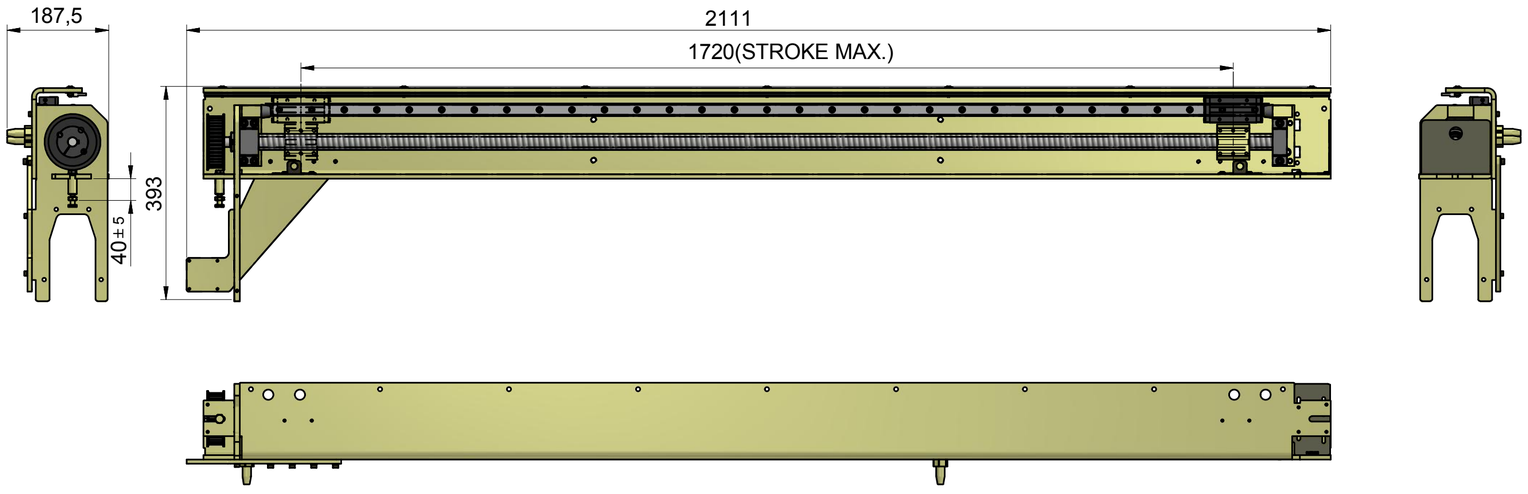

REVISION HISTORY EAS				
REV	ECO	DESCRIPTION	DATE	APPROVED
-	E0106	RELEASE ACC.ECO	16-12-2017	osr
A		UPDATE	24-10-2018	welgravenj

Parts List

ITEM	QTY	PART NUMBER	DESCRIPTION
1	1	FB992-101	BASE PROFILE
2	1	FB996-101	MOUNTING PLATE DRIVE
3	1	FB998-101	REINFORCEMENT PLATE
4	2	FB1000-690	SPACER BLOCK
5	2	FB1002-690	BUFFER BLOCK
6	1	FB1004-010	TRAPEZE SPINDLE
7	1	FB1007-021	TRAPEZE NUT
8	2	FB1008-111	BRACKET
9	1	FB1009-104	SHAFT
10	1	FB1010-034	ADAPTOR
11	2	FB1011-061	CENTER-PIN
12	7	FB1045-127	LOCK STRIP
13	1	FB1059-298	PROTECTION SHIELD
14	1	FB1068-098	BRUSH
15	1	PP0503-886	LINEAR GUIDE
16	1	PP0505-885	SLIDER
17	1	PP0507-155	BEARING FIXED
18	1	PP0508-155	BEARING LOOSE
19	2	PP0509-067	IMPACT BUFFER
20	1	RD160001-261	TAPER BUSH
21	1	PP0513-719	BELT PULLEY
22	1	CAA613-2511A	KEY-PARALLEL W6x28
23	1	CCE1020-0441A	RING-RETAINER 20x1,2
24	8	CBA515-0281E	SCREW M5x10
25	4	CCA519.028-1A	SCREW M5x16
26	4	CAA1050.108-2A	WASHER M5
27	7	PP0493-047	SCREW M6x16
28	35	CCA621.028-1A	SCREW M6x20
29	4	CAA1060.108-2A	WASHER M6
30	31	CCE1006-1085C	WASHER-SPRING M6
31	2	CCA817-0281A	SCREW M8x12
32	1	CBE819-0461B	DIN 933 - M8 x 16
33	2	CCA831.028-1A	SCREW M8x45
34	6	CCA844-0281A	SCREW M8x85
35	1	CAE1080-1081A	WASHER M8
36	6	CCE1008.108-5C	WASHER-SPRING M8
37	2	CCA1021.028-5A	SET SCREW M10x20

TOLERANCES ON DIMENSIONS UNLESS SPECIFIED ± MM[inch]						TOL. ON ANGLES UNLESS SPEC.	TOL. ON RADII UNLESS SPEC. ± MM[inch]			
SIZE	0.5-6 [.02-.24]	6-30 [.24-1.18]	30-120 [1.18-4.72]	120-315 [4.72-12.40]	315-1000 [12.40-39.37]		SIZE	0.5-3 [.02-.12]	3-6 [.12-.24]	6-30 [.24-1.18]
TOL.	0.1 [.004]	0.2 [.008]	0.3 [.012]	0.5 [.02]	0.8 [.03]	± 1°	TOL.	0.2 [.008]	0.5 [.02]	1 [.04]

SPECIFICATIONS

DIMENSIONS IN BRACKETS ARE IN [INCH]

NO CHANGE, NO PROGRESS

FINISH UNLESS SPECIFIED
3,2 Raµm [Raµ]

WEIGHT: ± 78 kg

SCALE 1 : 8

ALL ANGULAR DIMENSIONS ARE ± 1 ° UNLESS SPECIFIED

EAS® CHANGE SYSTEMS

www.EASchangesystems.com

DESCRIPTION
BASE PLATE ASSY
EPRM8-1600R

GROUP TECH. CODES	C.		DO NOT SCALE DRAWING	DR. osr	DATE 1-4-2016	DRAWING NO. FB986-950	Rev A	9/02
	M.			CH.	DATE			A2

THIS PRINT AND INFORMATION THEREIN IS CONFIDENTIAL AND PROPRIETARY AND IS THE PROPERTY OF EAS. IT IS NOT TO BE COPIED OR REPRODUCED WITHOUT WRITTEN PERMISSION OF EAS.